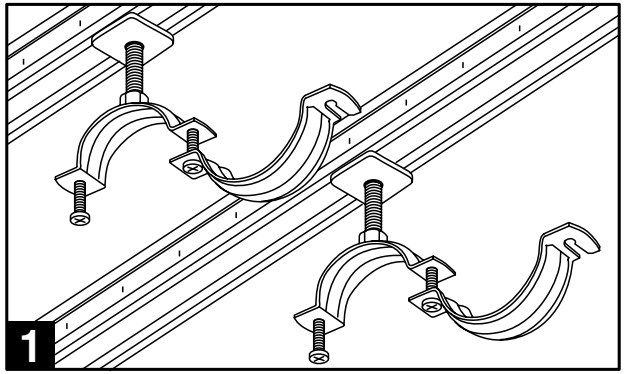
1

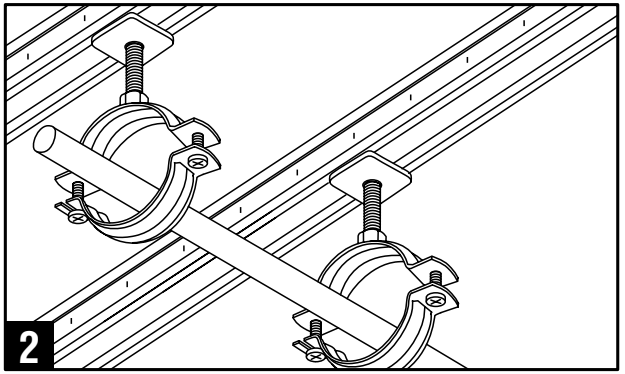
2

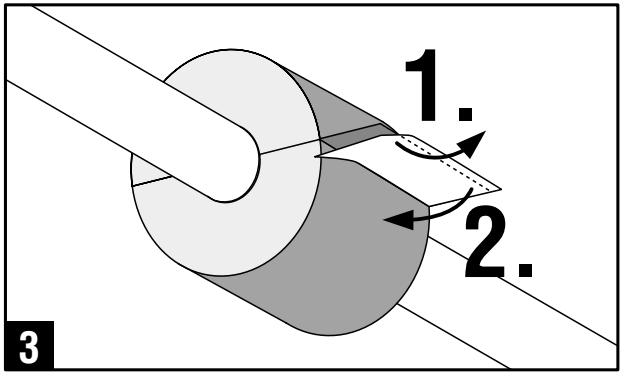
1.
2.
3

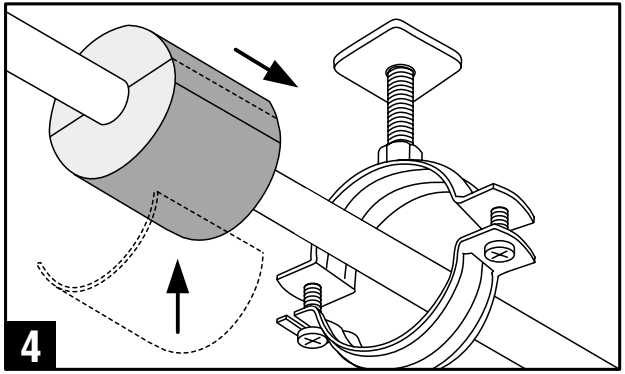
4

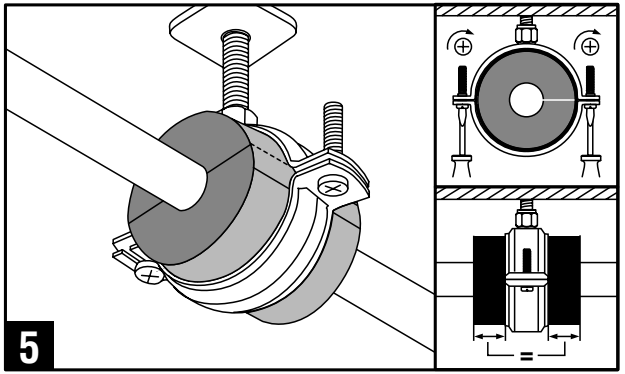
5
=

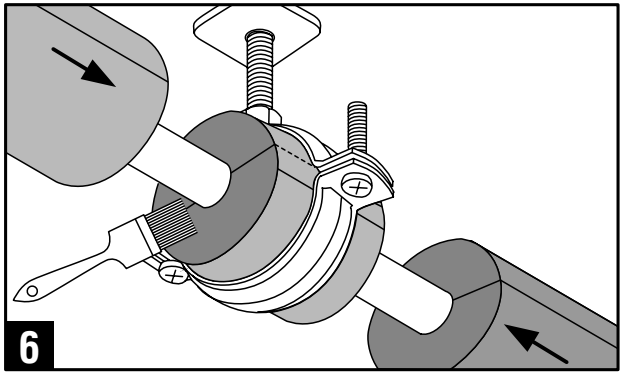
6