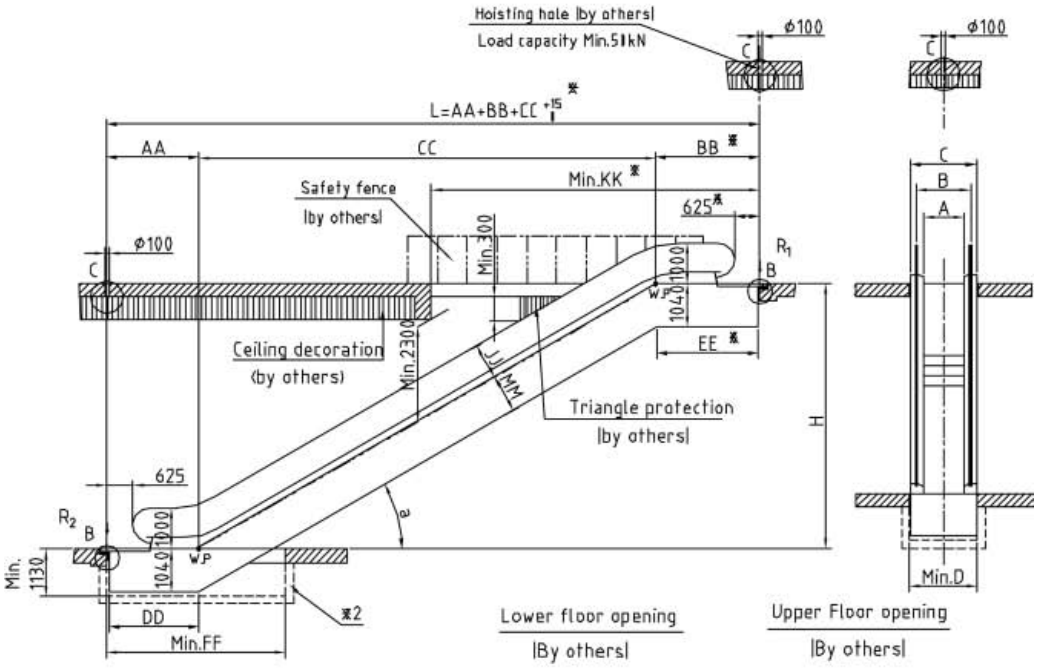

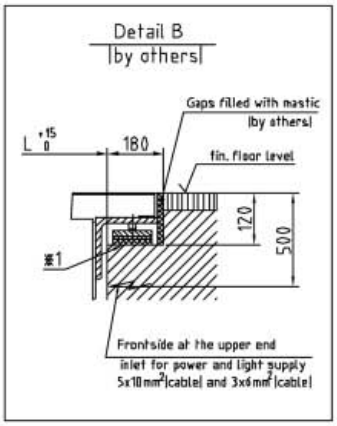

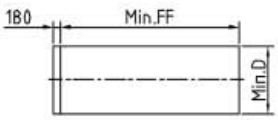

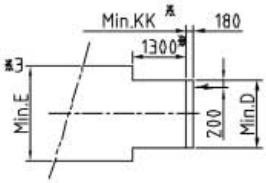

A	600	800	1000
B	830	1030	1230
C	1195	1395	1595
D	1250	1450	1650
E	1910	2110	2310
F	15000		

A	R(KN)
600	R1=3.4*L+15.5
	R2=3.4*L+10
800	R1=3.75*L+17
	R2=3.75*L+11
1000	R1=4.2*L+18.5
	R2=4.2L+11.5
Note:The unit of L is meter	

Type	a	AA	BB	CC	DD	EE	FF	JJ	KK	MM
COLINA302	30°	2173	2542	H*1.732	2180	2455	4350	870	8000	950
COLINA352	35°	2217	2638	H*1.428	2335	2440	4150	850	7500	970

1.Note:
Mark 1:Supports need to be in level.
Mark 2:If there is pit, pit need to be water restraint and smooth.
Mark 3:If dimension E can't be guaranteed, a guard acc. EN115 must be provided as shown.
2.According to EN115,the entrance of bothing landing must have enough area for the passengers
3.Add 500mm with in case of A=600

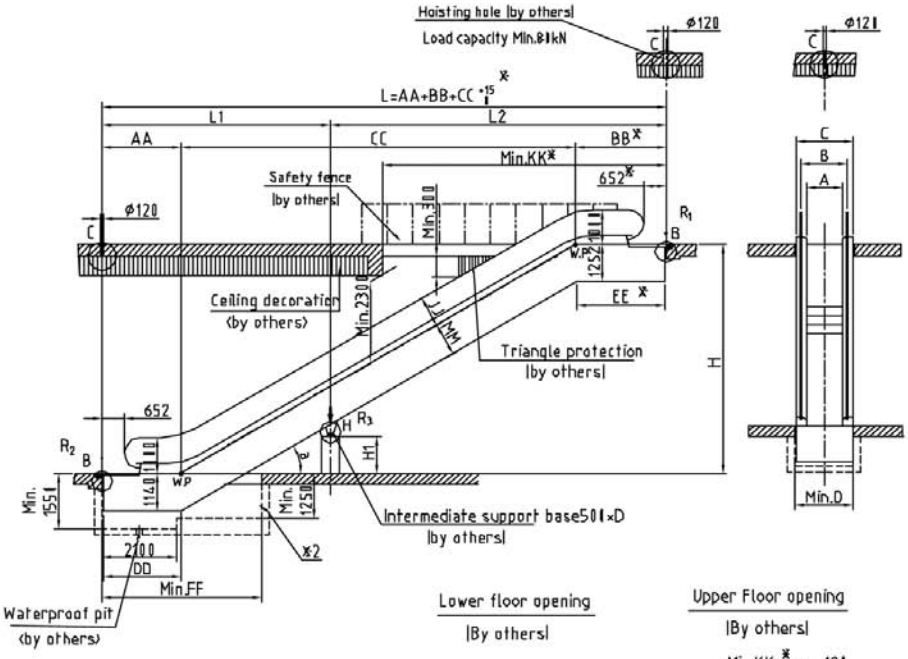

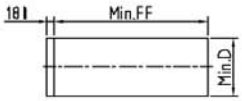

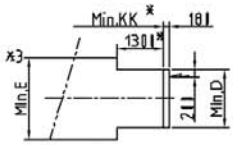

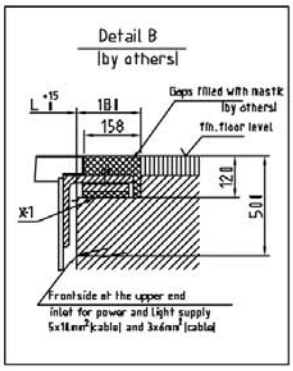

Type	a	AA	BB	CC	DD	EE	FF	JJ	KK	MM
SIERRA 302	30°	2196	2586	H*1.732	2332	2838	4500	870	8000	1076
SIERRA 352	35°	2229	2668	H*1.428	2466	2736	4300	850	7500	1096
SIERRA 303	30°	2686	3076	H*1.732	2822	3328	5000	870	8500	1076
SIERRA 353	35°	2719	3158	H*1.428	2956	3226	4800	850	8000	1096
SIERRA 303	30°	2954	3398	H*1.732	3090	3650	5250	870	8900	1076

A	R(KN)	
	[illegible]	[illegible]
600	R1=4.1*L+16.5	R1=4.1*L2+14.5
		R2=4.1*L1+7.1
	R2=4.1*L+9	R3=4.25*L+9.5
800	R1=4.5*L+18	R1=4.5*L2+16.1
		R2=4.5*L1+7.8
	R2=4.5*L+10	R3=4.7*L+10.5
1000	R1=5*L+19.5	R1=5*L2+17.5
		R2=5*L1+8.5
	R2=5*L+11	R3=5.2*L+11.5
[illegible]		

A	600	800	1000
B	830	1030	1230
C	1195	1395	1595
D	1270	1470	1670
E	1910	2110	2310
F	15000		

1.Note:
Mark 1:Supports need to be in level.
Mark 2:If there is pit, pit need to be water restraint and smooth.
Mark 3:If dimension E can't be guaranteed, a guard acc. EN115 must be provided as shown.
Mark 4: the transition radius is 2700mm,others are 1500mm
2.According to EN115,the entrance of bathing landing must have enough area for the passengers
3.Add 500mm with in case of A=600

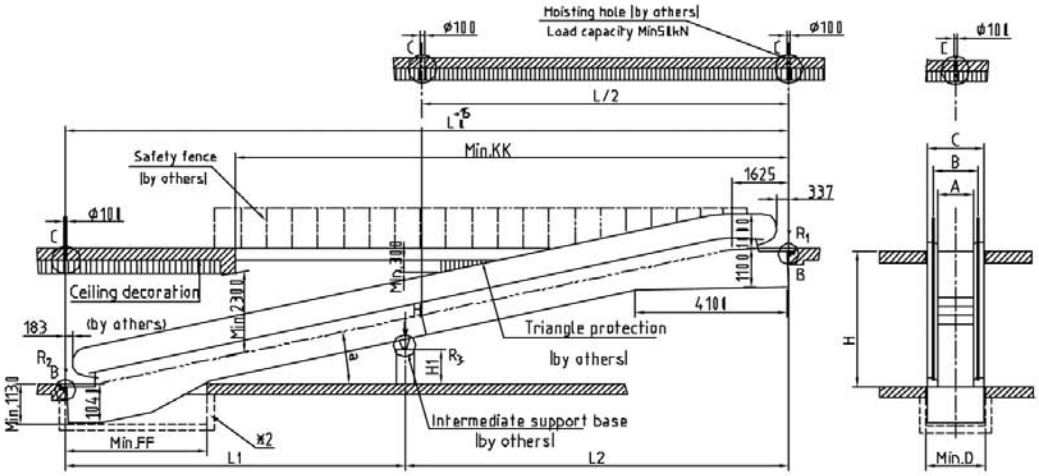

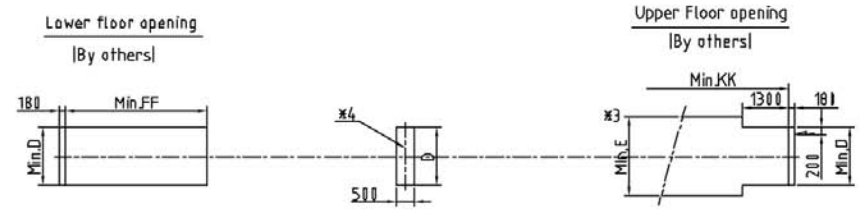

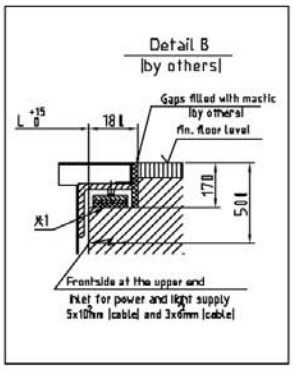

A	800	1000
B	1030	1230
C	1395	1595
D	1450	1650
E	2040	2240

Type	a	L	H1	KK	FF
PONT 10	10°	H*5.671+2660	0.1763*L1-1043	18000	4500
PONT 11	11°	H*5.145+2565	0.1944*L1-1067	17000	4250
PONT 12	12°	H*4.705+2485	0.2126*L1-1048	16000	4000

A	R(KN)
800	R1=3.5*L2+14.5
	R2=3.5*L1+7.2
	R3=4.1*L+16
1000	R1=3.9*L2+16
	R2=3.9*L1+7.9
	R3=4.5L+17.5
Note:1.The unit of L,L1 and L2 is meter,L1 and L2 do not exceed 15m 2.only available with one intermediate support	

1.Note:
Mark 1:Supports need to be in level.
Mark 2:If there is pit, pit need to be water restraint and smooth.
Mark 3:If dimension E can't be guaranteed, a guard acc. EN115 must be provided as shown.
2.According to EN115,the entrance of bothing landing must have enough area for the passengers